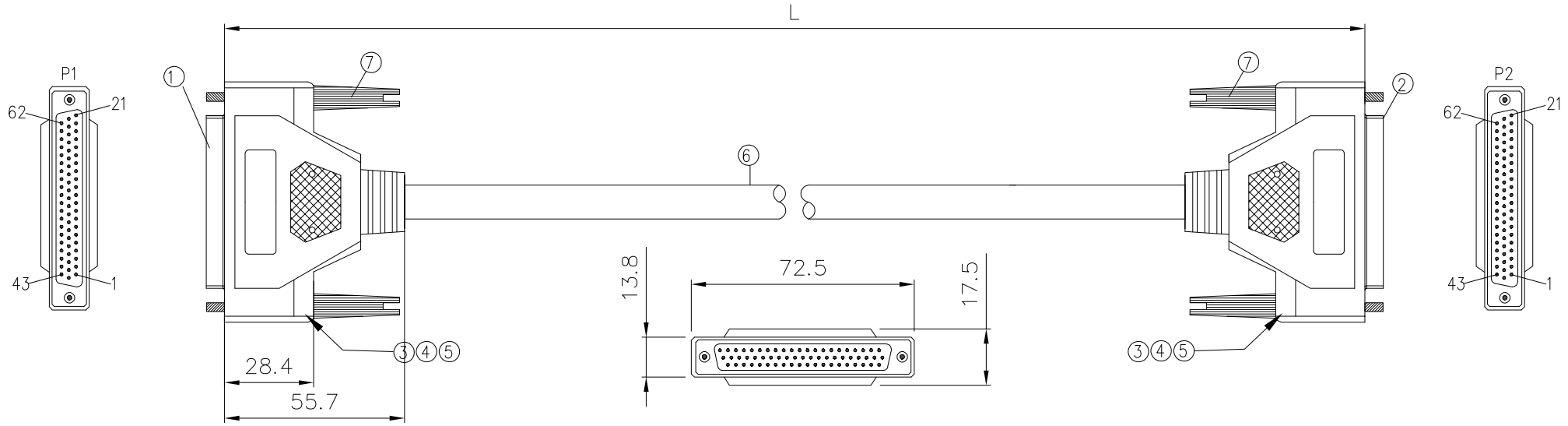

Pin assignment

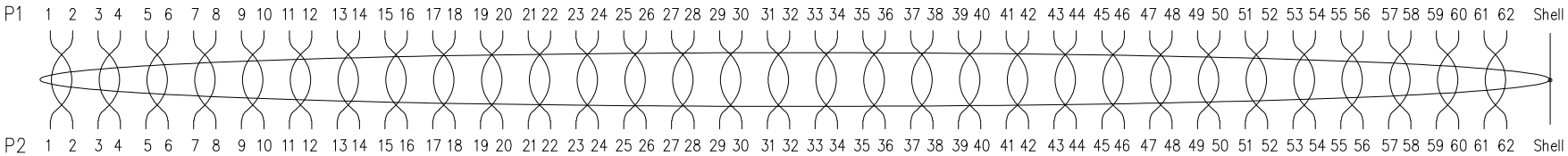

Notes:
1.Electrical test: 100% open,short&miss wire test.
2.Conductor resistance: 5Ω max.
3.Insulator resistance: 5MΩ min, DC 300V 0.01sec.
4.ROHS compliant
5.Part number description: A04-06221XXX-A1,
XXX: 001=length: 10cm

Item	Part name	Description	Qty
7	Screw	Screw #4-40 Ni(big E33 black)	4pcs
6	Cable	UL20276 28AWG*31P+AEB,PVC jacket,color black, OD 10.0mm	1pcs
5	Copper foil	Copper foil W=25mm	NA
4	Over mold	45P PVC color: black	NA
3	Inside mold	PE	NA
2	Connector	HD.D-SUB 62pin female solder,housing color black	1pcs
1	Connector	HD.D-SUB 62pin female solder,housing color black	1pcs

SIDE	DATE	DESCRIPTION	APPROVER
3			
2			
1	2025/01/12	First edition release	Carl Hu

QUALITY SYMBOLS
□: CRITICAL
⊠: MAJOR
▽: ZERO DEFECT
▽: S.P.C

Tolerance

Length(mm)	Tolerance(mm)
300~2000	±50
2001~5000	±100
5001~	±150

NAME:	HD.D-SUB 62pin female to female cable				PART NO.	A04-06221XXX-A1	
REV:	A	UNIT:	mm	DRW BY	CHK BY	APP BY	DRAWING NO.
SCALE:	NONE	DATE:	2025/01/12	Yugong	Carl Hu		A04-033

lineconn 东莞市林诚塑胶电子有限公司
http://www.lineconn.com
TEL:0769-85181660 85181770