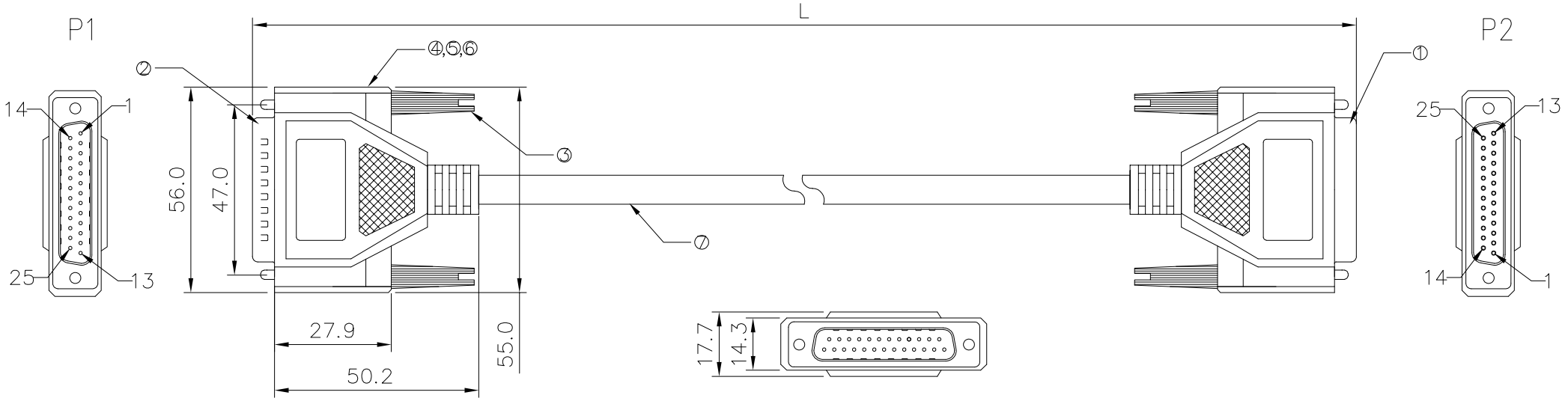

Pin assignment

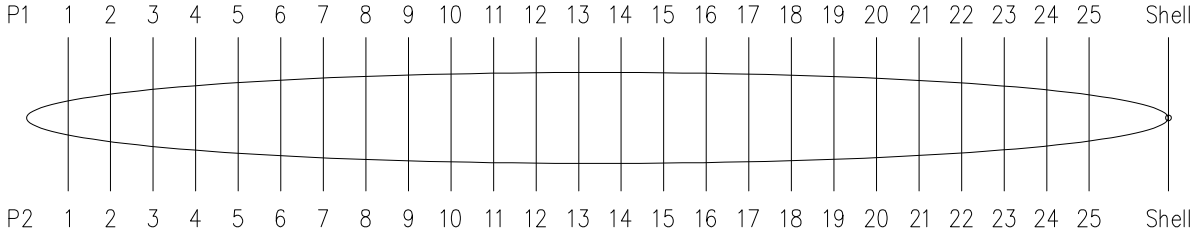

Item	Part name	Description	Qty
7	Cable	UL2464 25C*24AWG+ABD PVC jacket color:black OD 9.0mm	1pcs
6	Copper foil	Copper foil W=25mm	NA
5	Over mold	45P PVC color:black	NA
4	Inside mold	PE	NA
3	Screw	Screw #4-40,plated Ni(big E33BK)	4pcs
2	Connector	D-SUB 25pin male solder,color:black	1pcs
1	Connector	D-SUB 25pin female solder,color:black	1pcs

Notes:
1.Electrical test:100% open,short&miss wire test.
2.Conductor resistance:5Ω max.
3.Insulator resistance: 5MΩ min, DC 300V 0.01sec.
4.ROHS compliant
5.Part number description:A05-02531XXX-03,
XXX:001=length:10cm

SIDE	DATE	DESCRIPTION	APPROVER
3	2026/06/22	Modify the shape, Add dimension annotations	Carl Hu
2	2023/04/15	Add dimension annotations	Jack Chen
1	2019/12/09	First edition release	Jack Chen

QUALITY SYMBOLS
□: CRITICAL
⊠: MAJOR
▽: ZERO DEFECT
▽: S.P.C

Tolerance

Length(mm)	Tolerance(mm)
300~2000	±50
2001~5000	±100
5001~	±150

NAME:	D-SUB 25Pin male to female cable, molder type,25C*24AWG+ABD,black				PART NO.	A05-02531XXX-03	
REV:	C	UNIT:	mm	DRW BY	CHK BY	APP BY	DRAWING NO.
SCALE:	NONE	DATE:	2019/12/09	Yugong	Carl Hu		A05-052

lineconn 东莞市林诚塑胶电子有限公司
http://www.lineconn.com
TEL:0769-85181660 85181770