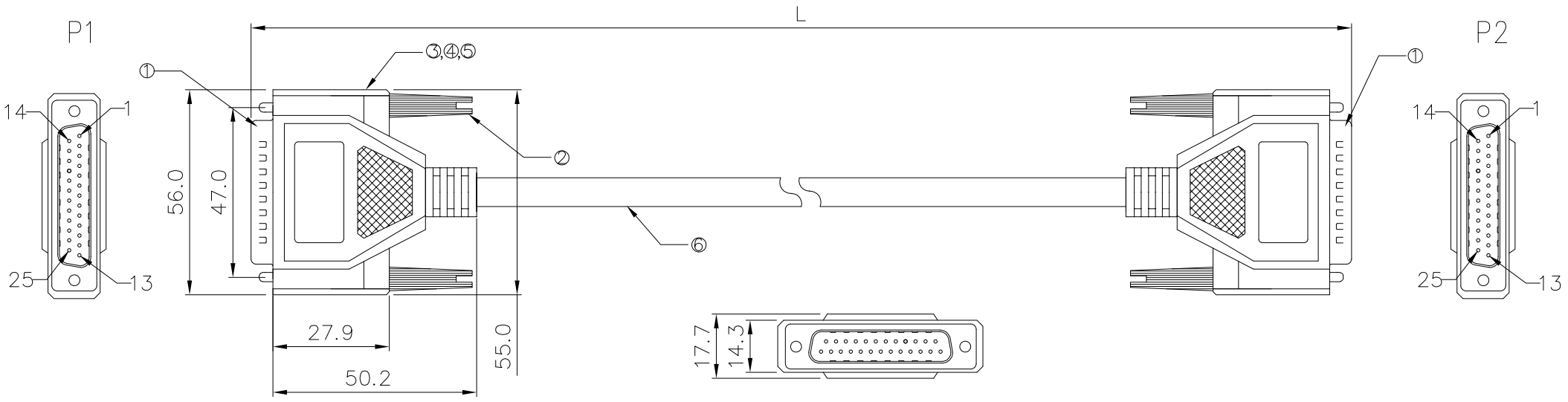

Pin assignment

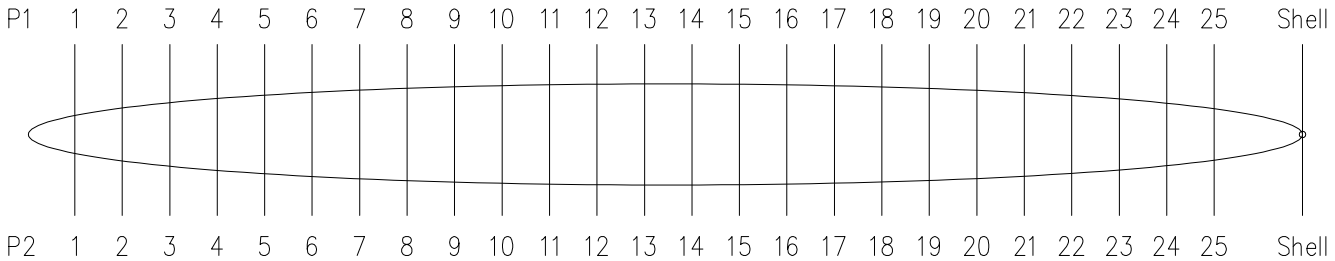

Notes:
1.Electrical test: 100% open,short&miss wire test.
2.Conductor resistance: 5Ω max.
3.Insulator resistance: 5MΩ min, DC 300V 0.01sec.
4.ROHS compliant
5.Part number description: A05-02511XXX-03,
XXX: 001=length: 10cm

Item	Part name	Description	Qty
6	Cable	UL2464 25C*24AWG+ABD PVC jacket color:black OD 9.0mm	1pcs
5	Copper foil	Copper foil W=25mm	NA
4	Over mold	45P PVC color:black	NA
3	Inside mold	PE	NA
2	Screw	Screw #4-40,plated Ni(big E33BK)	4pcs
1	Connector	D-SUB 25pin male solder,color:black	2pcs

SIDE	DATE	DESCRIPTION	APPROVER
3			
2	2026/06/22	Modify the shape, Add dimension annotations	Carl Hu
1	2018/05/24	First edition release	Shuo Cao

QUALITY SYMBOLS
□: CRITICAL
⊠: MAJOR
▽: ZERO DEFECT
▽c: S.P.C

Tolerance	
Length(mm)	Tolerance(mm)
300~2000	±50
2001~5000	±100
5001~	±150

NAME:	D-SUB 25Pin male to male cable,molder type,25C*24AWG+ABD,black				PART NO.	A05-02511XXX-03	
REV:	B	UNIT:	mm	DRW BY	CHK BY	APP BY	DRAWING NO.
SCALE:	NONE	DATE:	2018/05/24	Qing Liao	Carl Hu		A05-035

lineconn 东莞市林诚塑胶电子有限公司
http://www.lineconn.com
TEL:0769-85181660 85181770