No.of contact	A	B	C	D
15	16.33	24.99	30.81	19.28
26	24.66	33.32	39.14	27.51
44	38.38	47.04	53.04	41.28
62	54.84	63.50	69.32	57.71

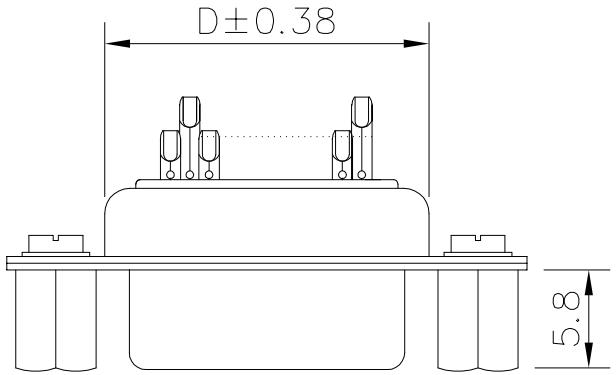

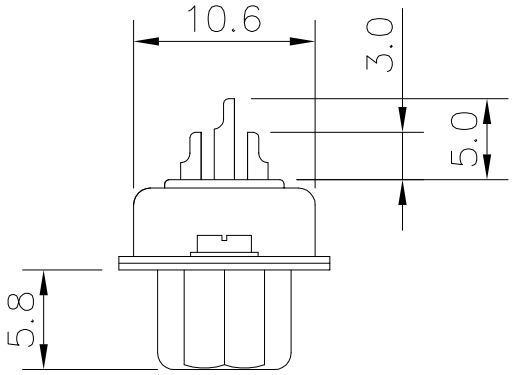

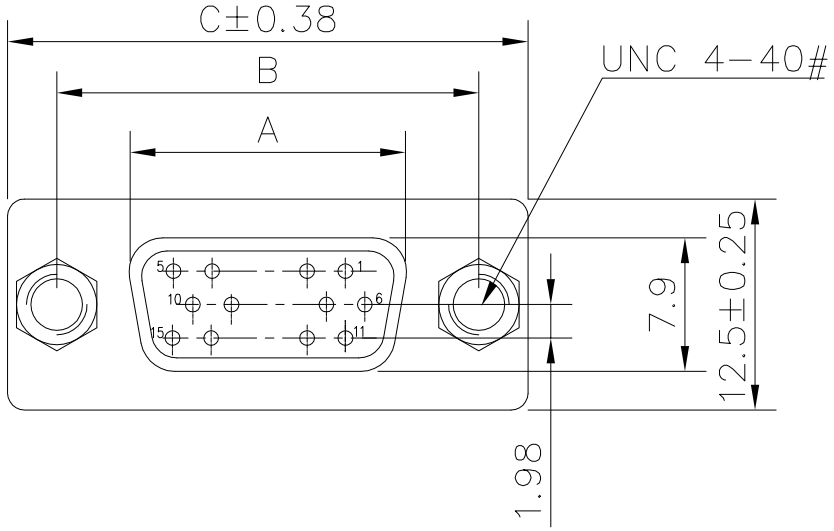

Current rating: 3 AMP.
Withstanding voltage: 500V AC
Insulation resistace: 500MΩ Min.
Contact resistance: 35mΩ max.
Temperature range: −55℃ to +125℃
ROHS compliant
Part No.:

B04−0XX4X1A0−E5

No.of contact:
15: 15pin
26: 26pin
44: 44pin
62: 62pin

Housing color:
1: black
5: white
6: blue

Item	Desc.	Material	Remark
5	Screw	Steel	Palting: Ni
4	Rear shell	SPCC	Palting: Sn
3	Front shell	SPCC	Palting: Ni
2	Housing	PBT+30%GF	Color: see part no.
1	Terminal	Copper alloy	Contact area: G/F Solder area: Sn

SIDE	DATE	DESCRIPTION	APPROVER
3	2021/06/17	Change tolerance	Shuo Cao
2	2021/06/06	Change part number	Shuo Cao
1	2010/08/29	First edition release	Jing Li

QUALITY SYMBOLS
□: CRITICAL
⊠: MAJOR
▽: ZERO DEFECT
▽: S.P.C

Tolerance	
x.	±0.60
.x	±0.40
.xx	±0.25

NAME:	HD.D−SUB female solder,front riveted 5.8mm solid core nut				PART NO.	B04−0XX4X1A0−E5	
REV:	C	UNIT:	mm	DRW BY	CHK BY	APP BY	DRAWING NO.
SCALE:	N:1	DATE:	2010/08/29	Huangmei	Shuo Cao		B04−019

lineconn 东莞市林诚塑胶电子有限公司
http://www.lineconn.com
TEL:0769−85181660 85181770