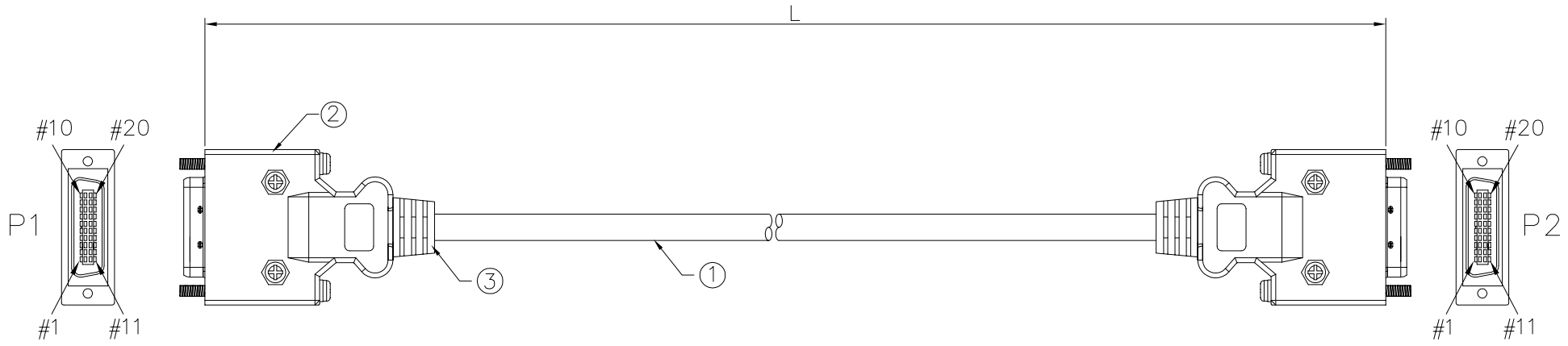

Pin assignment

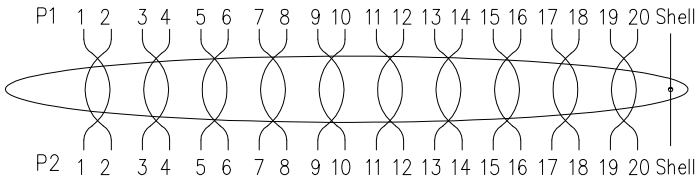

Notes:
1.Electrical test: 100% open,short&miss wire test.
2.Conductor resistance: 5 ohms max.
3.Insulator resistance: 1m ohms min, dc 300v 0.01sec.
4.ROHS compliant
5.Part number description: A03-02011XXX-01,
XXX: 001=length: 10cm

Item	Part name	Description	Q'ty
3	SR	Rubber,color: black	2pcs
2	Connector	SM 20pin male solder plastic hood with screw,33mm screws	2set
1	Cable	UL20276 10P*28AWG+AB,jacket: PVC color: black,OD 7.0mm	NA

SIDE	DATE	DESCRIPTION	APPROVER
△2	2021/04/13	Changed BOM	Jack Chen
△1	2020/12/03	First edition release	Jing Li

QUALITY SYMBOLS
□: CRITICAL ⊠: MAJOR
▽: ZERO DEFECT ▽C: S.P.C

Tolerance

Length(mm)	Tolerance(mm)
300~2000	±50
2001~5000	±100
5001~	±150

NAME:	SM 20pin male to male cable				PART NO.	A03-02011XXX-01	
REV:	B	UNIT:	mm	DRW BY	CHK BY	APP BY	DRAWING NO.
SCALE:	NONE	DATE:	2020/12/03	Huangmei	Jack Chen		A03-014

lineconn 东莞市林诚塑胶电子有限公司
http://www.lineconn.com
TEL:0769-85181660 85181770