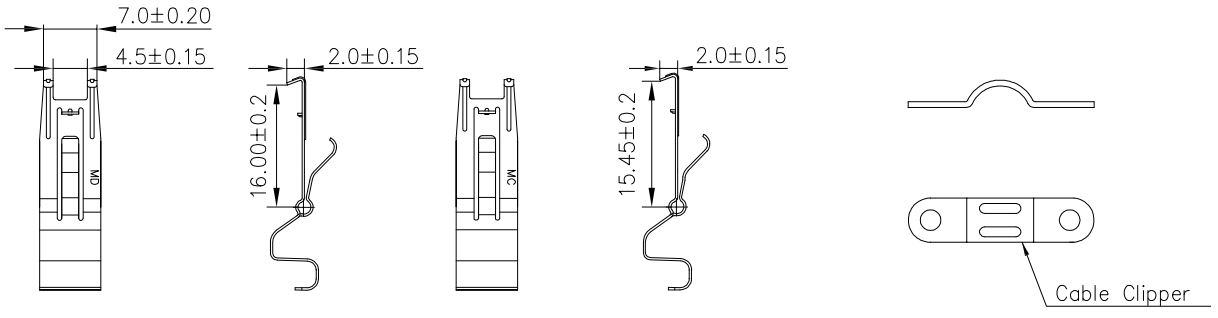

<HPDB> <HPCN>

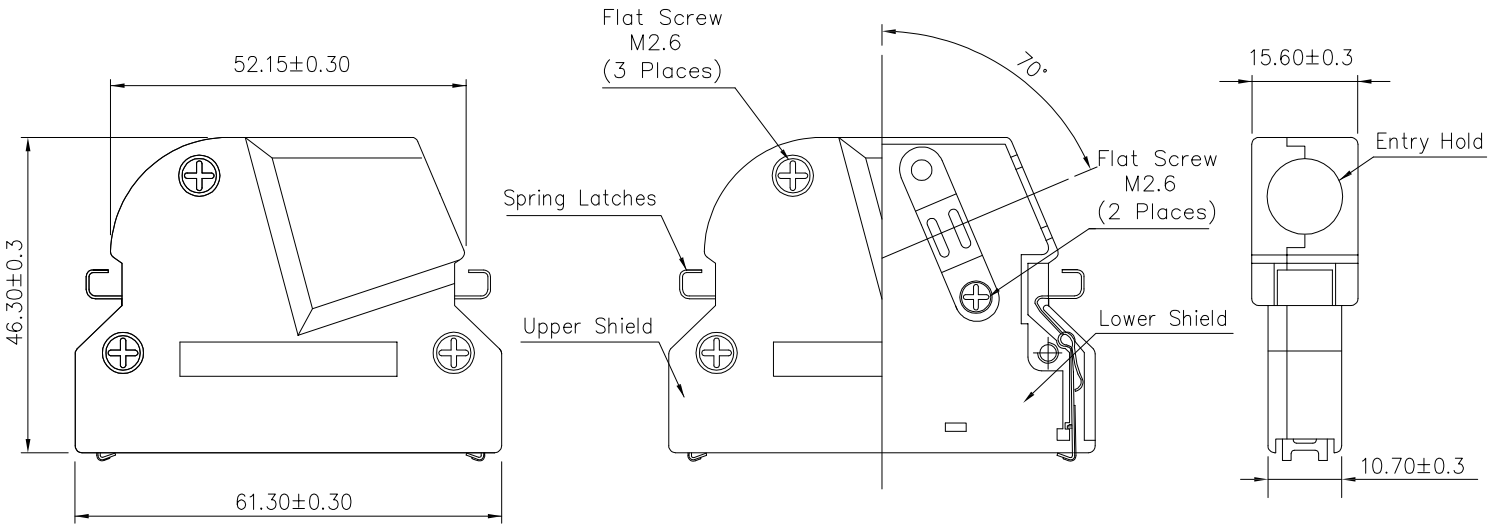

Part No.:

BXX-068NN8NH-XX

Specification:
02: HPDB
03: HPCN

Entry hold sizes:
90: 9.0mm
1B: 11.0mm

Item	Desc.	Material	Remaks
4	Cable clipper	Steel	Plating: Ni
3	Flat scrwe	Steel	Plating: Ni
2	Spring latch	Stainless steel	
1	Shield	Zinc alloy	Plating: Ni

SIDE	DATE	DESCRIPTION	APPROVER
3			
2	2024/07/30	Change part number	Shuo Cao
1	2012/07/23	First edition release	King Zhou

QUALITY SYMBOLS
□: CRITICAL
⊠: MAJOR
▽: ZERO DEFECT
▽: S.P.C

Tolerance	
x.	±0.80
.x	±0.50
.xx	±0.30

NAME:	SCSI 68pin male zinc alloy hood,with latch,cable comes out the side				PART NO.	BXX-068NN8NH-XX	
REV:	B	UNIT:	mm	DRW BY	CHK BY	APP BY	DRAWING NO.
SCALE:	N:1	DATE:	2012/07/23	Huangmei	Shuo Cao		BXX-A10

lineconn 东莞市林诚塑胶电子有限公司
http://www.lineconn.com
TEL:0769-85181660 85181770