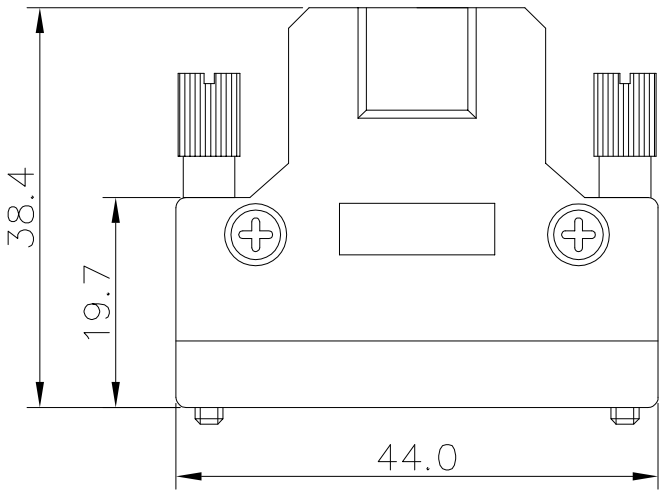

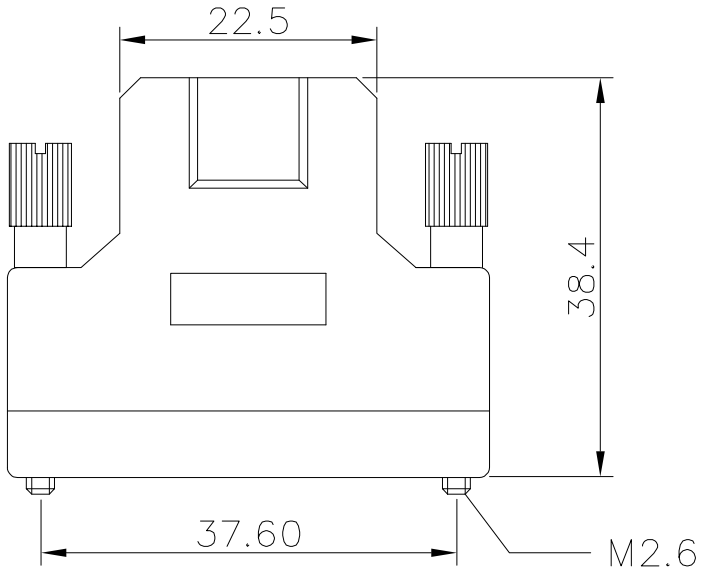

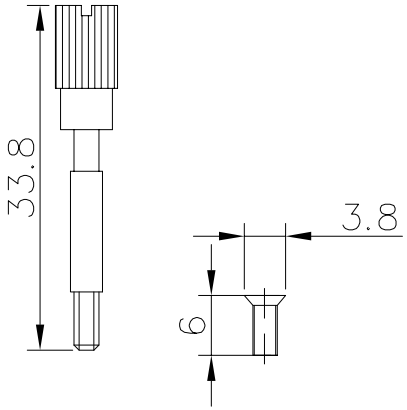

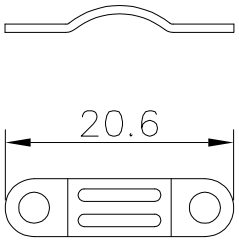

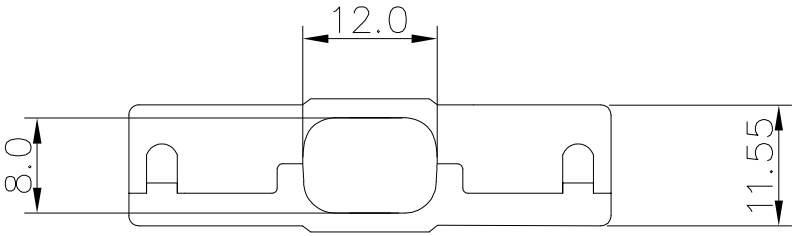

Item	DESC.	Material	Remark
4	Cable clipper	Steel	Plating: Ni
3	Flat scrwe	Steel	Plating: Ni
2	Jack scrwe	Steel	Plating: Ni
1	Backshell	Zinc alloy	Plating: Ni

SIDE	DATE	DESCRIPTION	APPROVER
3			
2	2021/05/09	Changed the part number	Shuo Cao
1	2020/03/16	First edition release	Jack Chen

QUALITY SYMBOLS
□: CRITICAL
⊠: MAJOR
▽: ZERO DEFECT
▽: S.P.C

Tolerance	
x.	±0.80
.x	±0.50
.xx	±0.30

NAME:	SCSI 36pin male zinc alloy hood with screw,OD 9.0mm				PART NO.	B03-036NN8N7-90	
REV:	B	UNIT:	mm	DRW BY	CHK BY	APP BY	DRAWING NO.
SCALE:	N:1	DATE:	2020/03/16	John Liao	Shuo Cao		B03-125

lineconn 东莞市林诚塑胶电子有限公司
http://www.lineconn.com
TEL:0769-85181660 85181770